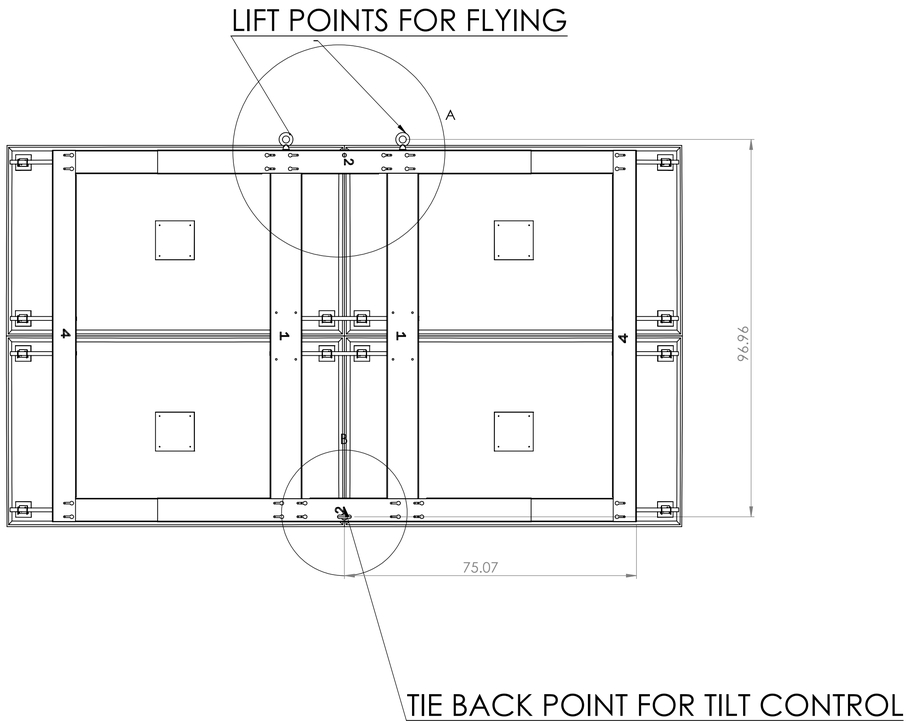

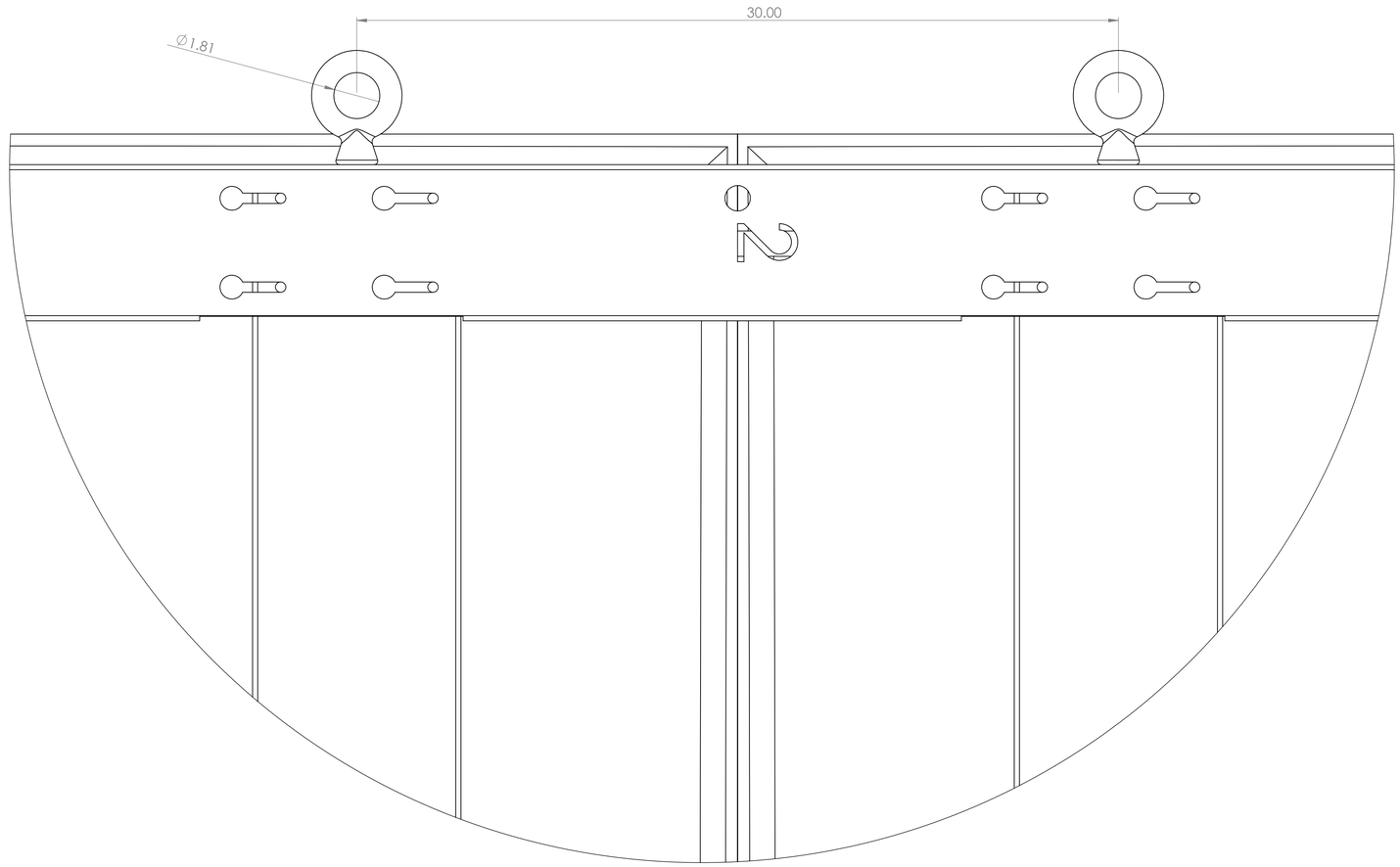

DETAIL A
SCALE 1 : 3

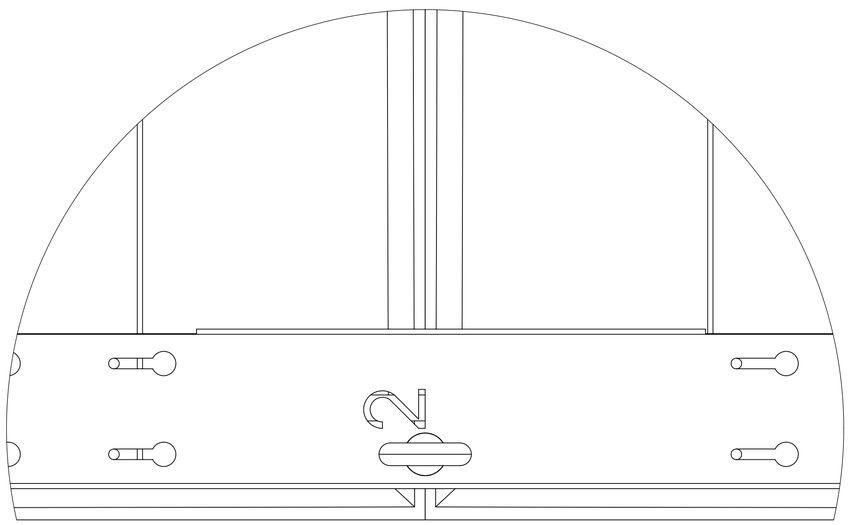

DETAIL B
SCALE 1 : 3

UNLESS OTHERWISE SPECIFIED: DIMENSIONS ARE IN MILLIMETERS SURFACE FINISH: TOLERANCES: LINEAR: ANGULAR:		FINISH:			DEBUR AND BREAK SHARP EDGES	DO NOT SCALE DRAWING	REVISION 5
	NAME	SIGNATURE	DATE			TITLE: CAPTURE 200 FLY POINTS	
DRAWN							
CHK'D							
APPV'D							
MFG							
Q.A				MATERIAL:		DWG NO.	A1
				WEIGHT:		SCALE:1:20	SHEET 1 OF 1